ROOF MOUNT KIT
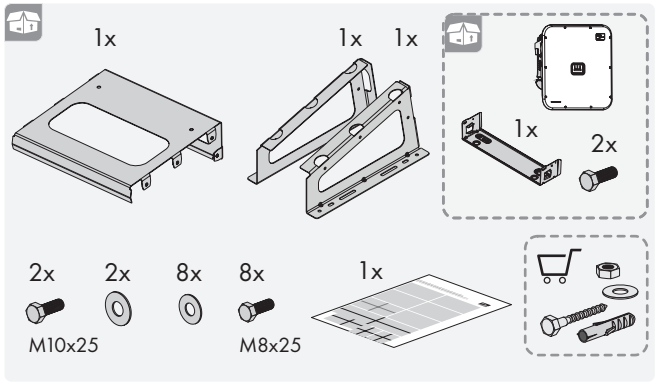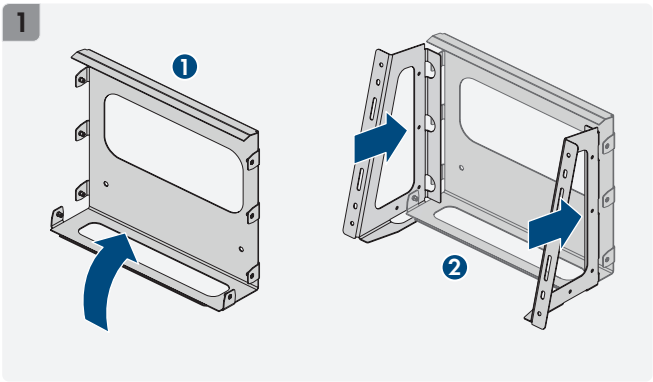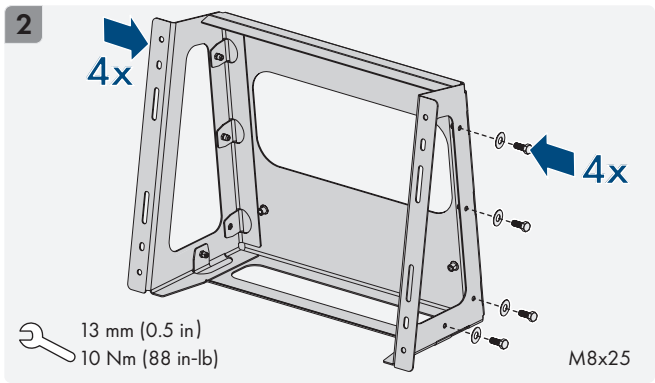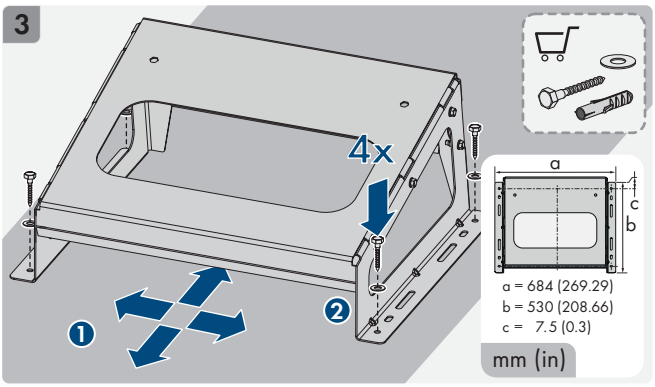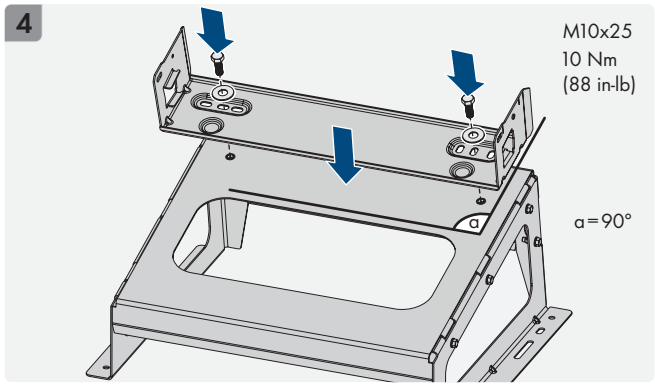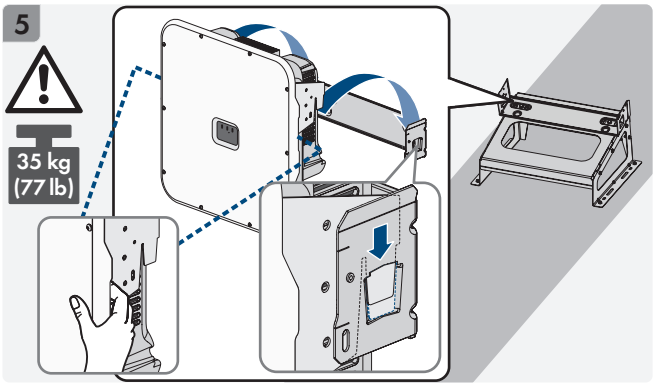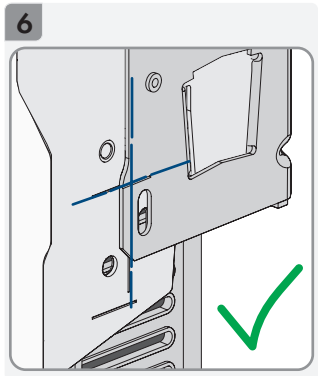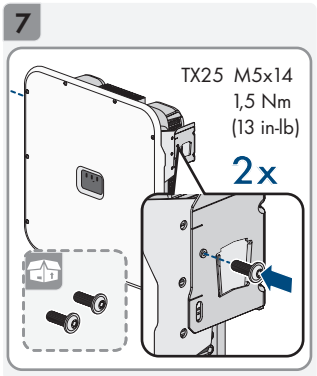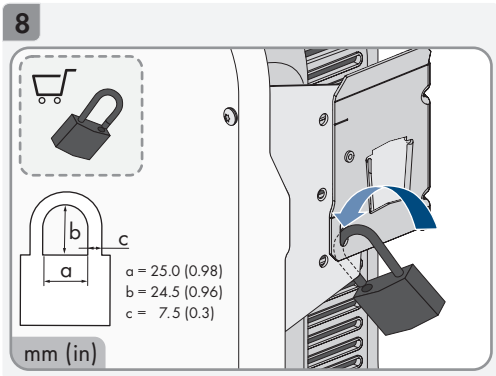
SUNNY TRIPOWER X / SUNNY TRIPOWER X-US /